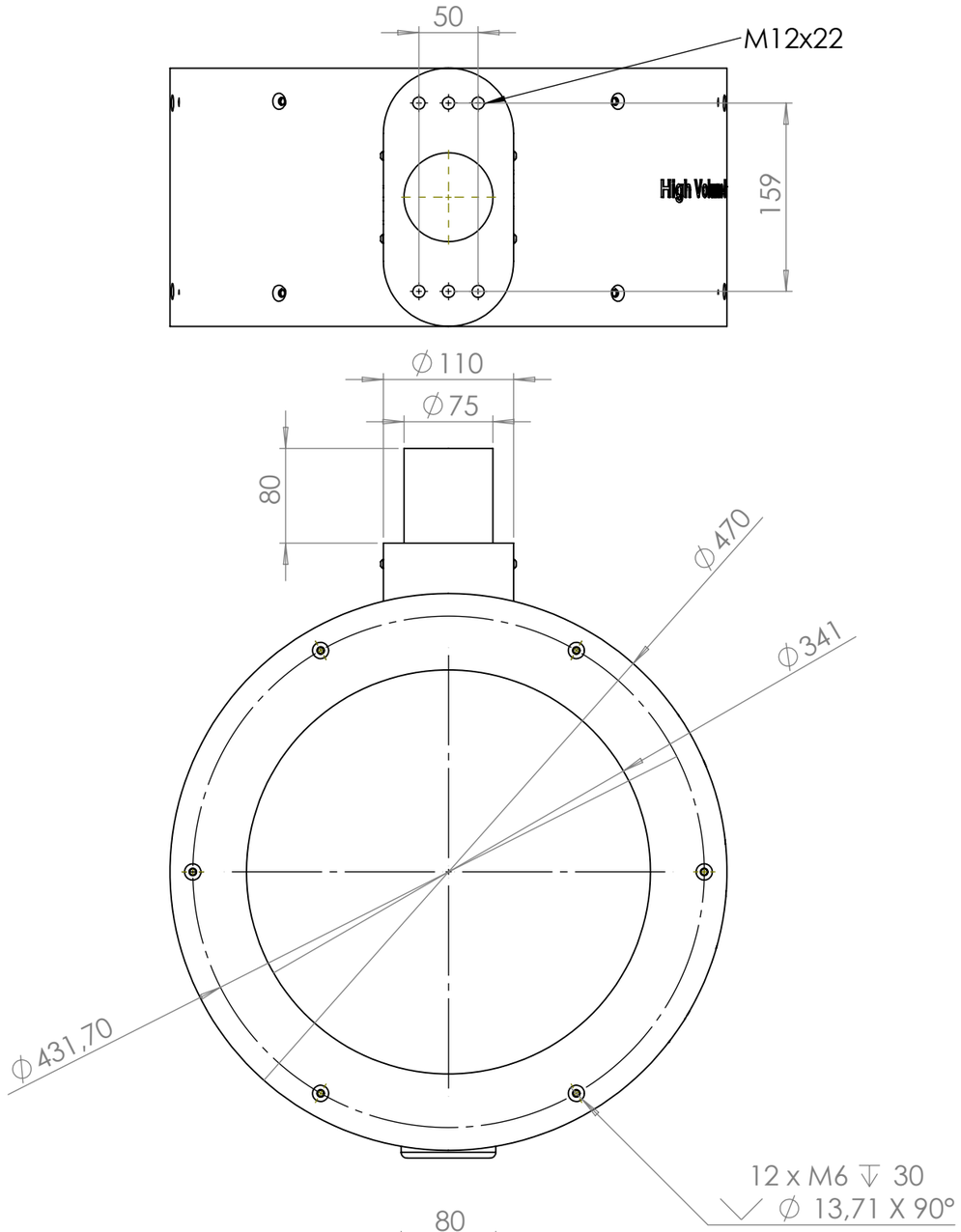

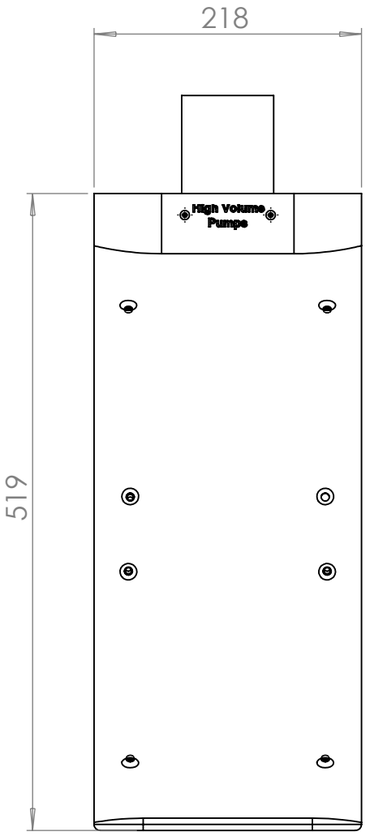

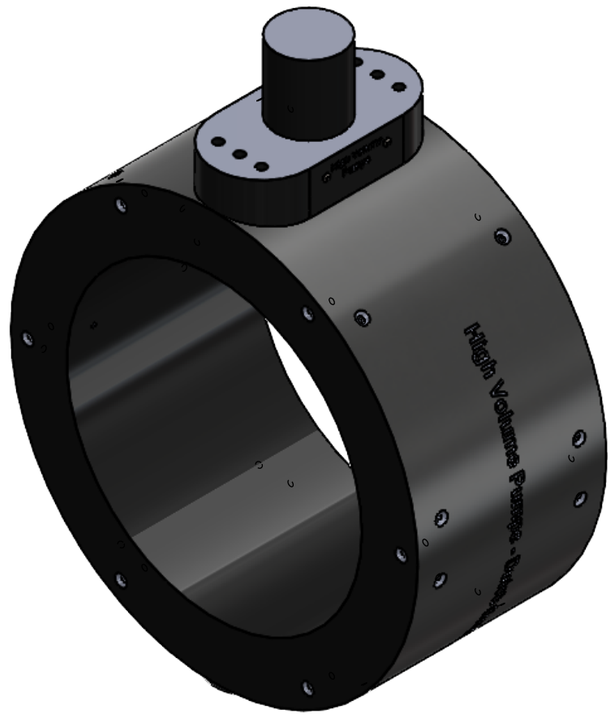

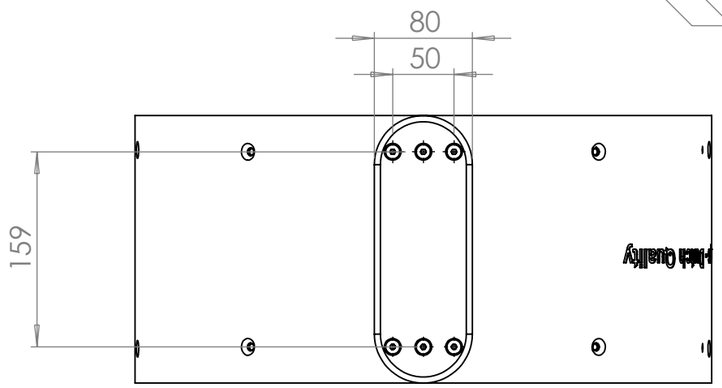

DESCRIPTION

341-Pro - Standard Pump dimensions

[redacted]

UNLESS STATED OTHERWISE:

According to NEN-ISO 2768-1-M

Dim. (mm)	Tol. (mm)
0.5-3	± 0.1
>3-6	± 0.1
>6-30	± 0.2
>30-120	± 0.3
>120-400	± 0.5
>400-1000	± 0.8
>1000-2000	± 1.2
>2000-4000	± 2.0
>4000-8000	± 3.0

PROJECTION METHOD

HIGH VOLUME PUMPS
The Dutch shaftless electric pump solution

Without written permission of HIGH VOLUME PUMPS nothing may be duplicated from these drawings or be exposed to thirds.

DIMENSIONS IN MILLIMETERS

UNLESS STATED OTHERWISE:
—

DRAWN	RS	DATE	12/05/2025
CHECKED	WH	SCALE	1:5

[redacted]

REV. A

A3

SHEET 1 OF 1