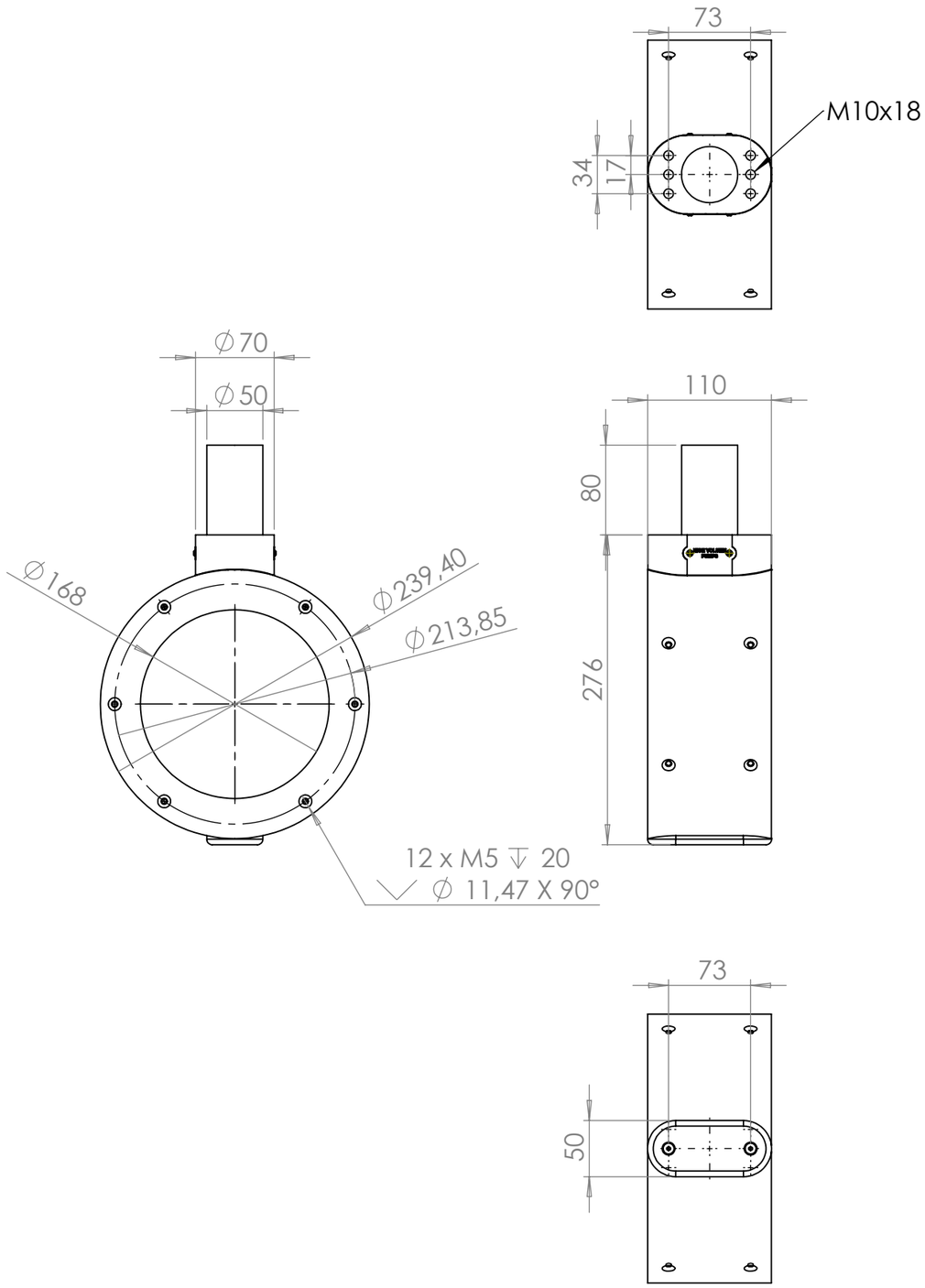

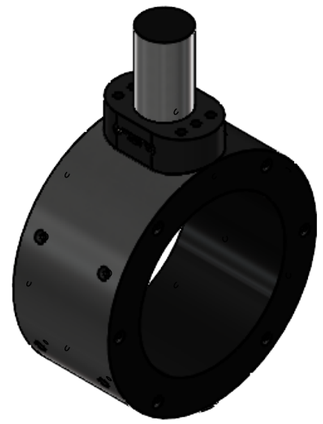

DESCRIPTION

168 - Standard Pump dimensions

ARTICLE CODE	[redacted]				
UNLESS STATED OTHERWISE: According to NEN-ISO 2768-1-M	PROJECTION METHOD	UNLESS STATED OTHERWISE: —	DRAWN	RS	DATE 12/05/2025
			CHECKED	WH	SCALE 1:5

Dim. (mm)	Tol. (mm)
0.5-3	± 0.1
>3-6	± 0.1
>6-30	± 0.2
>30-120	± 0.3
>120-400	± 0.5
>400-1000	± 0.8
>1000-2000	± 1.2
>2000-4000	± 2.0
>4000-8000	± 3.0

HIGH VOLUME PUMPS
The Dutch shaftless electric pump solution

Without written permission of HIGH VOLUME PUMPS nothing may be duplicated from these drawings or be exposed to thirds.

DIMENSIONS IN MILLIMETERS

[redacted]

REV. A

A3

SHEET 1 OF 1